PCB Terminal Blocks
Vertical High Density Header
ASIWJ15EDGVC-2.5

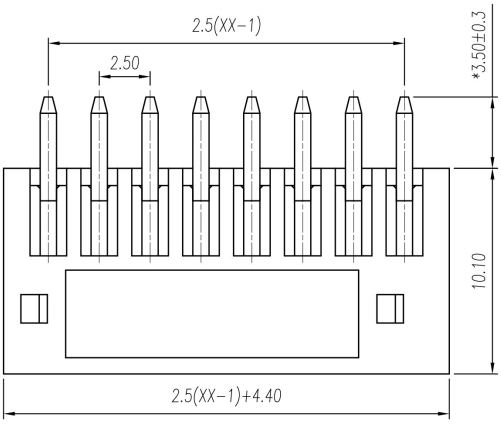

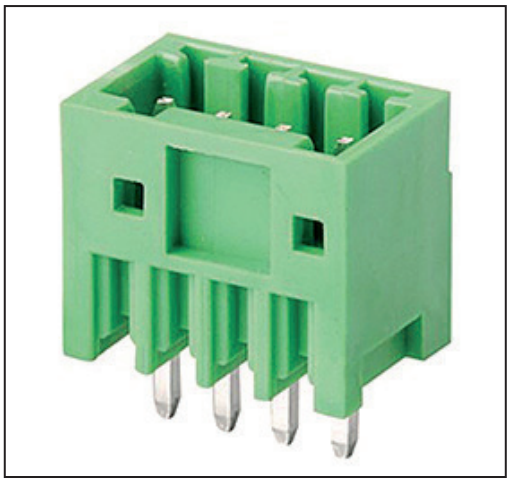

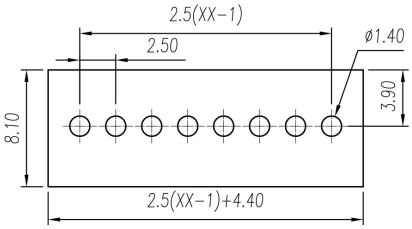

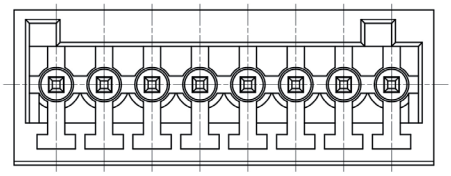

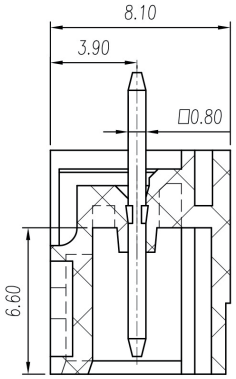

Certification	
	c UL us
Material	
Pin/Plate	Brass, Tin Plated
Housing	PA66, UL 94V-0, Green
Electrical	
Standard	UL 1059/CSA C22.2 No. 158
Rated Voltage	150 V
Rated Current	5 A
Contact Resistance	20mΩ
Insulation Resistance	500MΩ/500 Vdc
Widthstand Voltage	1500 Vac/1 Min
Mechanical	
Temperature Range	-40°C...+105°C
Size	
Pitch	2.5 mm (.098”)
Poles	2P-12P. Additional sizes available on request.

Item	No. of Poles	Length (mm)
ASIWJ15EDGVC-2.5-2P	2	6.9
ASIWJ15EDGVC-2.5-3P	3	9.4
ASIWJ15EDGVC-2.5-4P	4	11.9
ASIWJ15EDGVC-2.5-5P	5	14.4
ASIWJ15EDGVC-2.5-6P	6	16.9
ASIWJ15EDGVC-2.5-7P	7	19.4
ASIWJ15EDGVC-2.5-8P	8	21.9
ASIWJ15EDGVC-2.5-9P	9	24.4
ASIWJ15EDGVC-2.5-10P	10	26.9
ASIWJ15EDGVC-2.5-11P	11	29.4
ASIWJ15EDGVC-2.5-12P	12	31.9